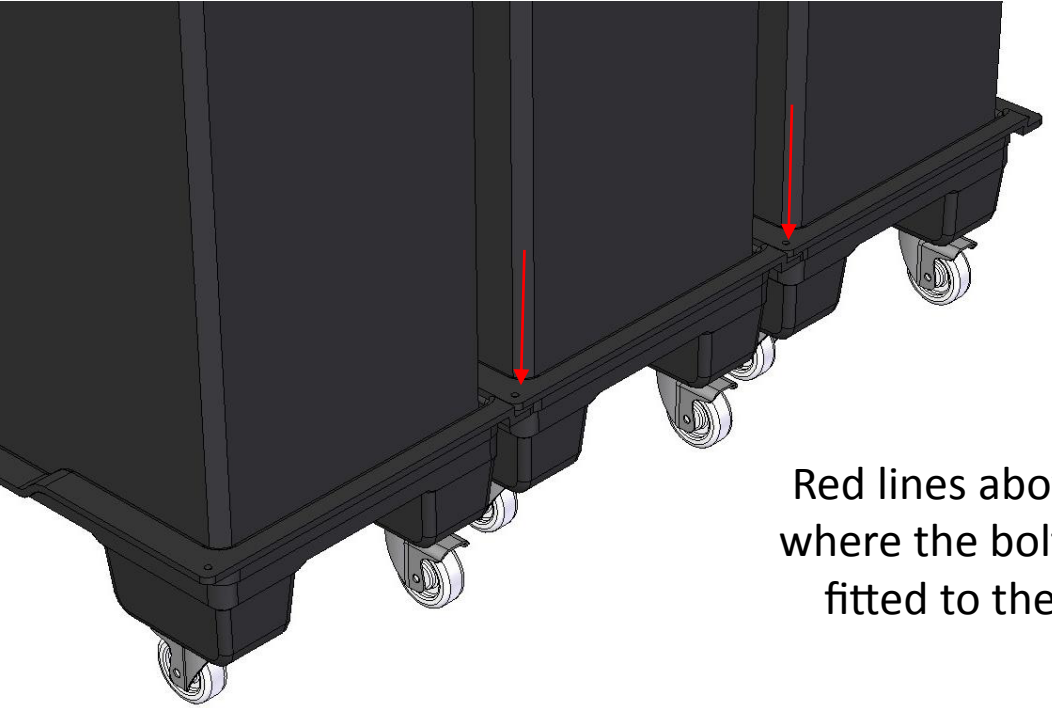

Red lines above show where the bolts will be fitted to the bases

Three units are bolted together using the holes on both sides of the base

When 3 units are fitted together, it forms a 1200 x 1000mm footprint

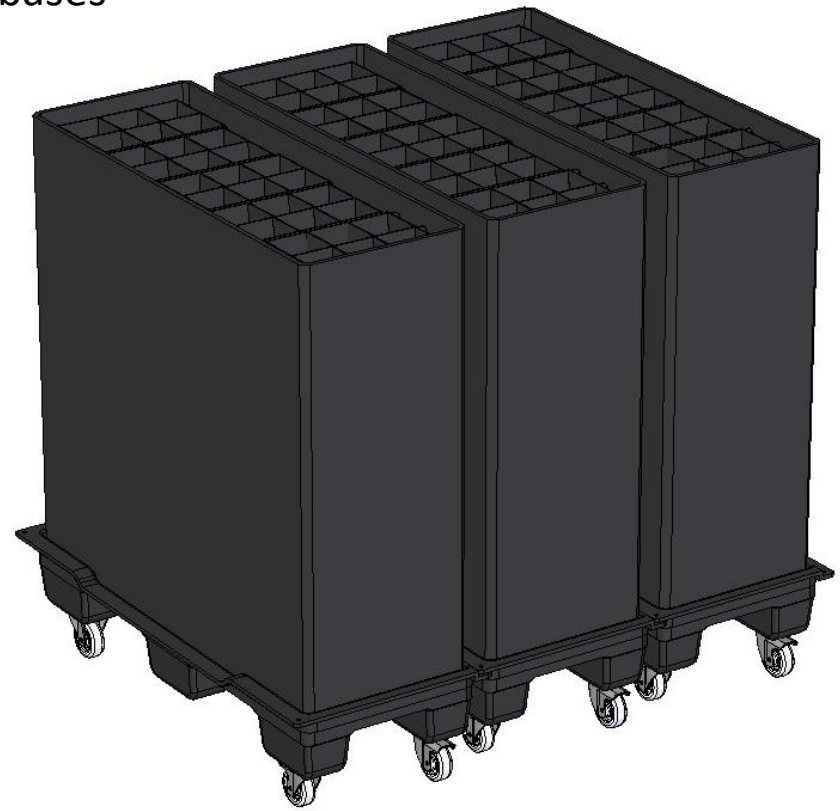

Picture to the left shows 3 individual units fitted together

The units all have castors on the base to make them easy to move around

A vacuum formed lid is placed on top of the 3 units, which stops the movement at the top of the unit

The lid allows another 3 units to be stacked on top

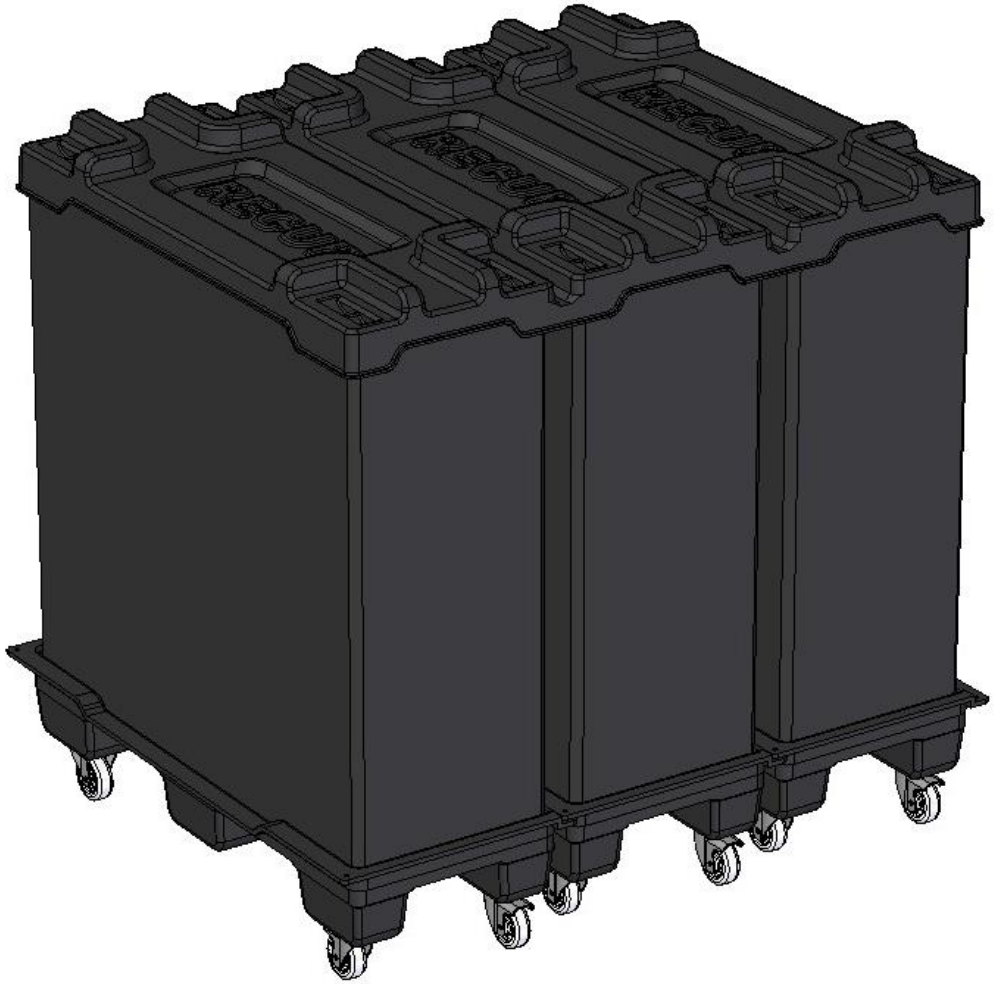

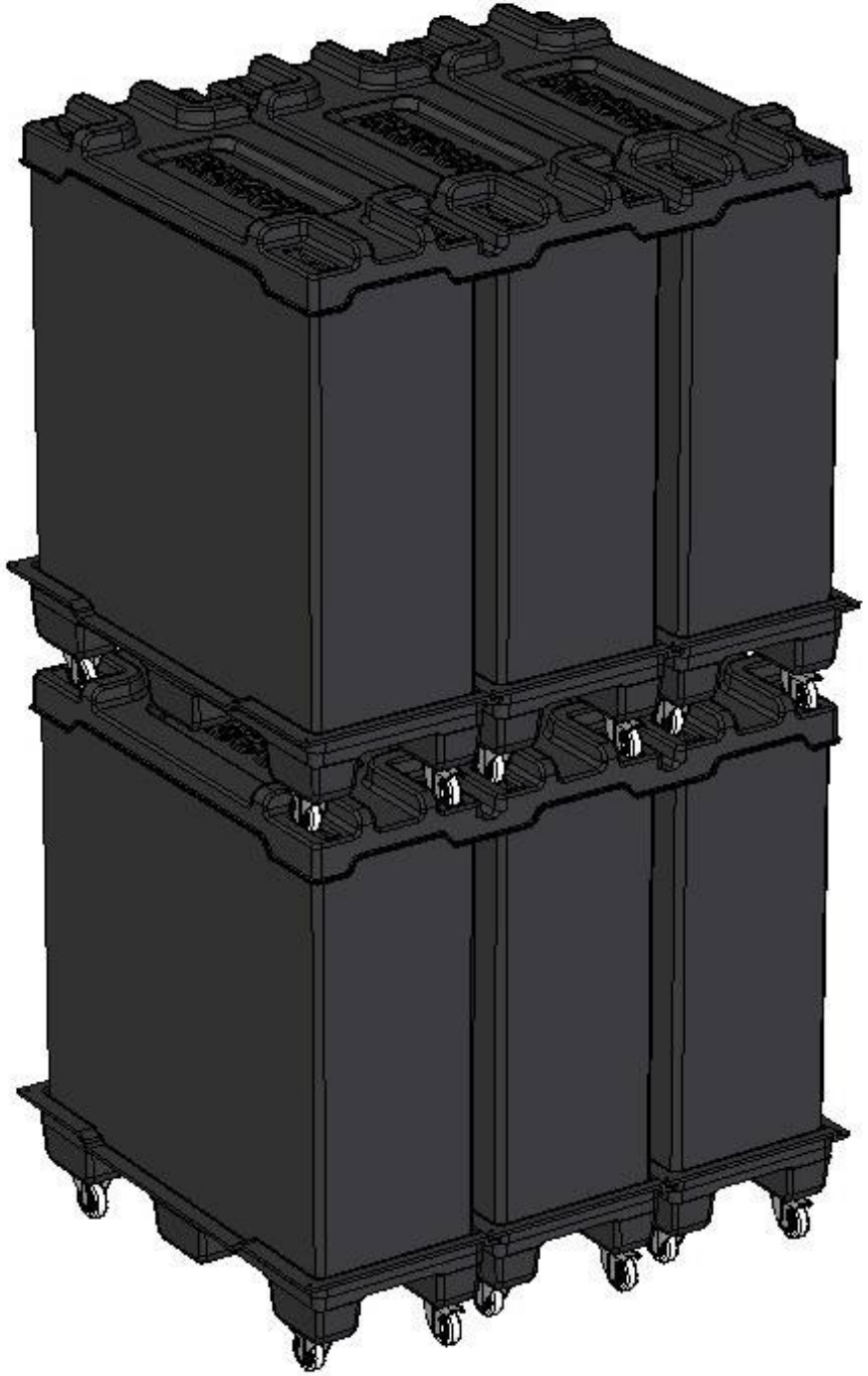

Picture to the right shows the units stacked on top of each other for despatch

The stack will be shrunk wrapped together to give extra support to the unit

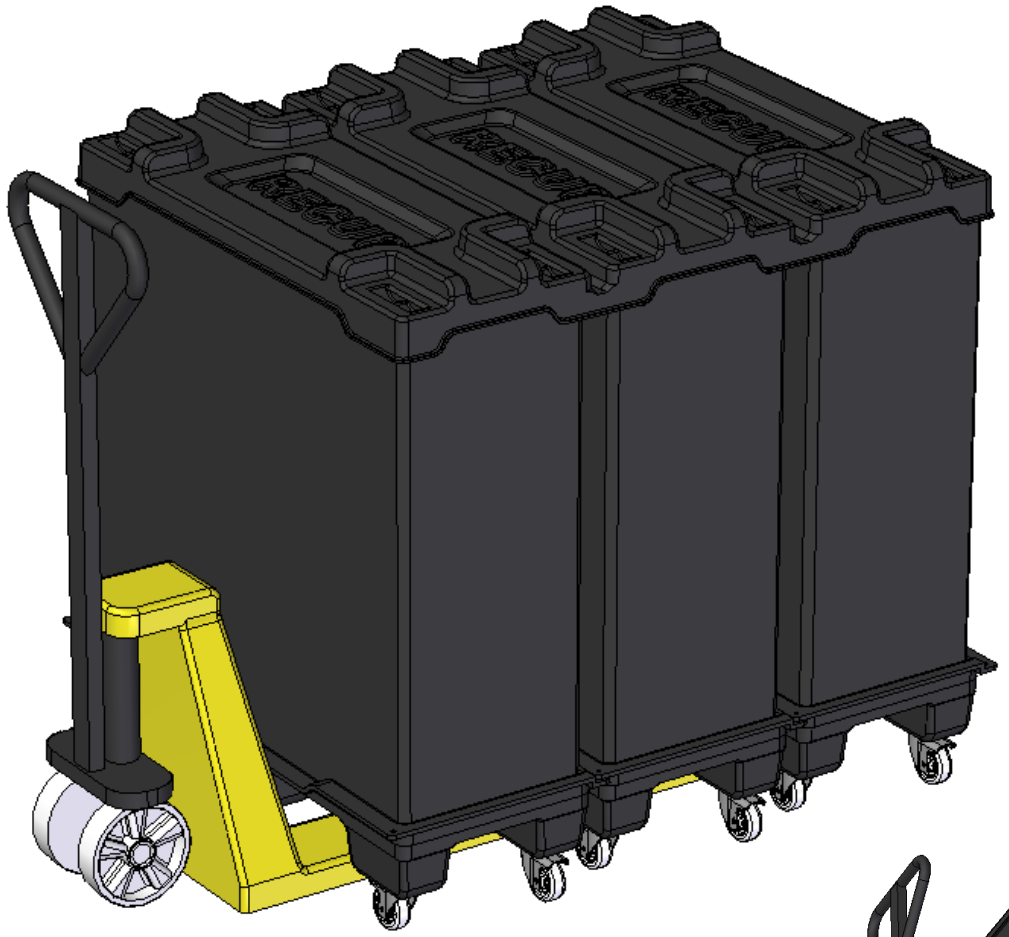

Three units together can be lifted on the short side by either a pump truck or FLT

When underneath, the folks will lift all three units at the same time

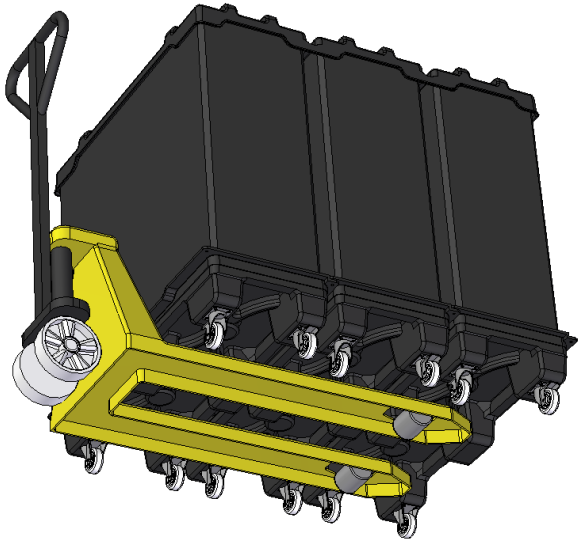

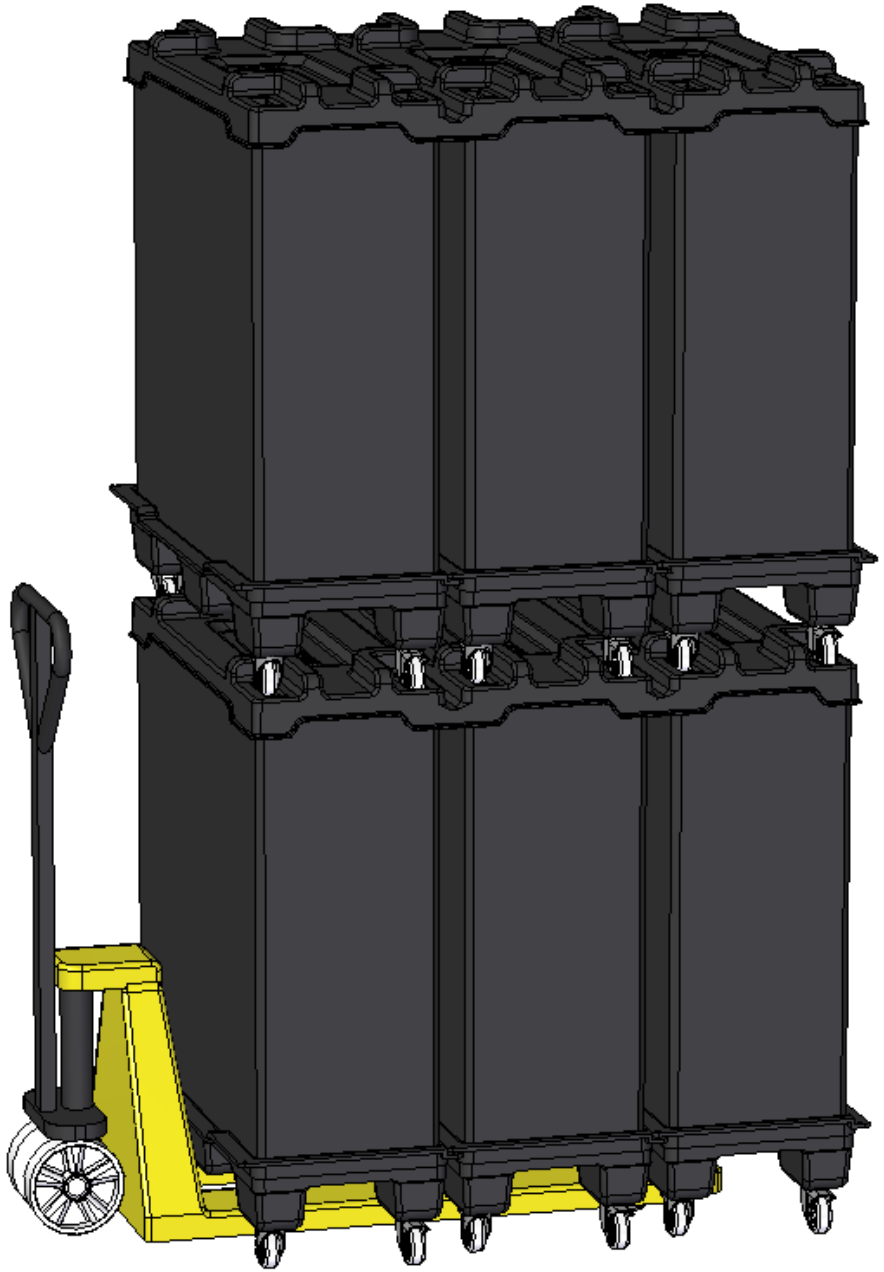

HAPPY CUPS